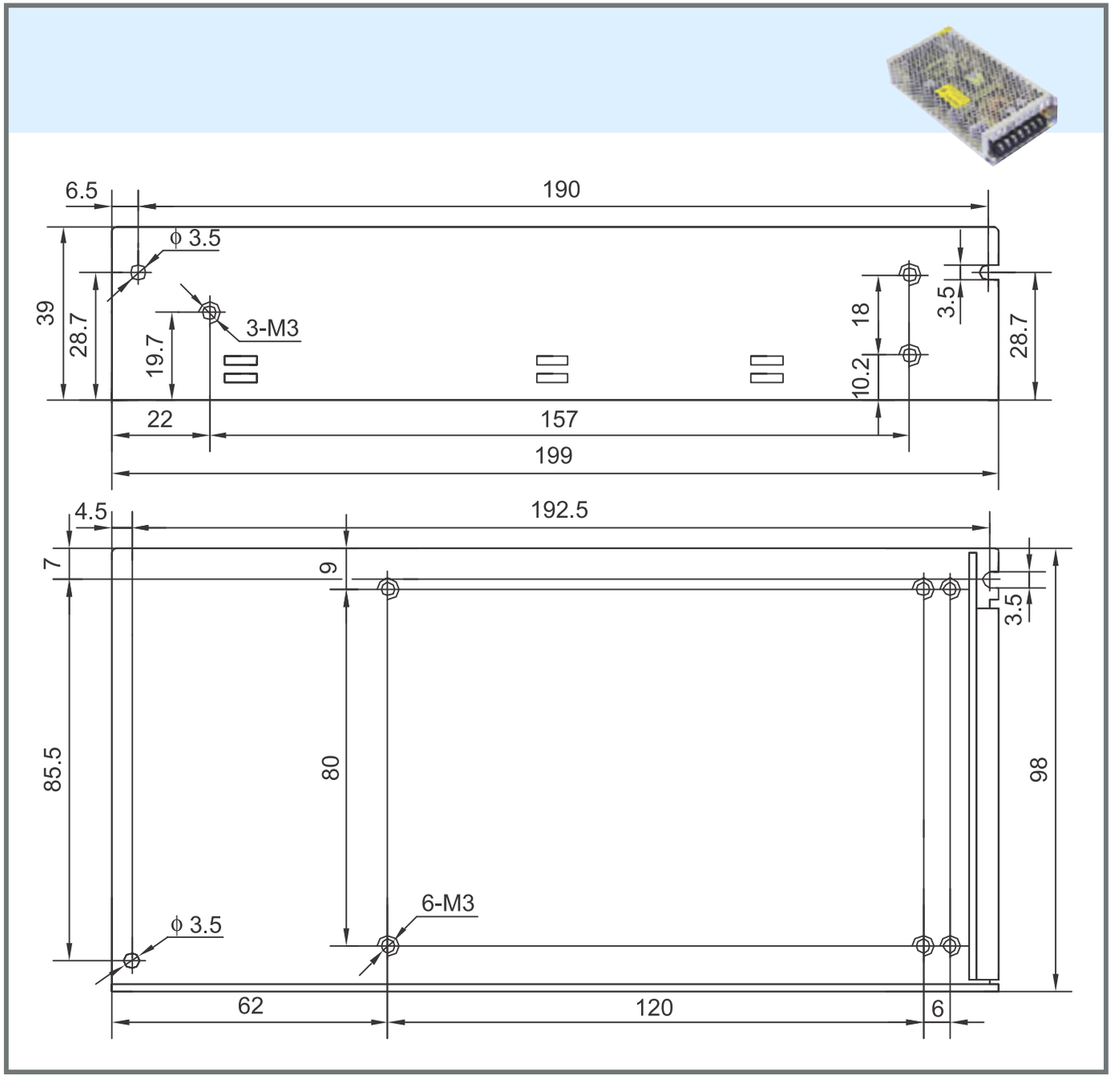Drawing: PS1-100W-SF