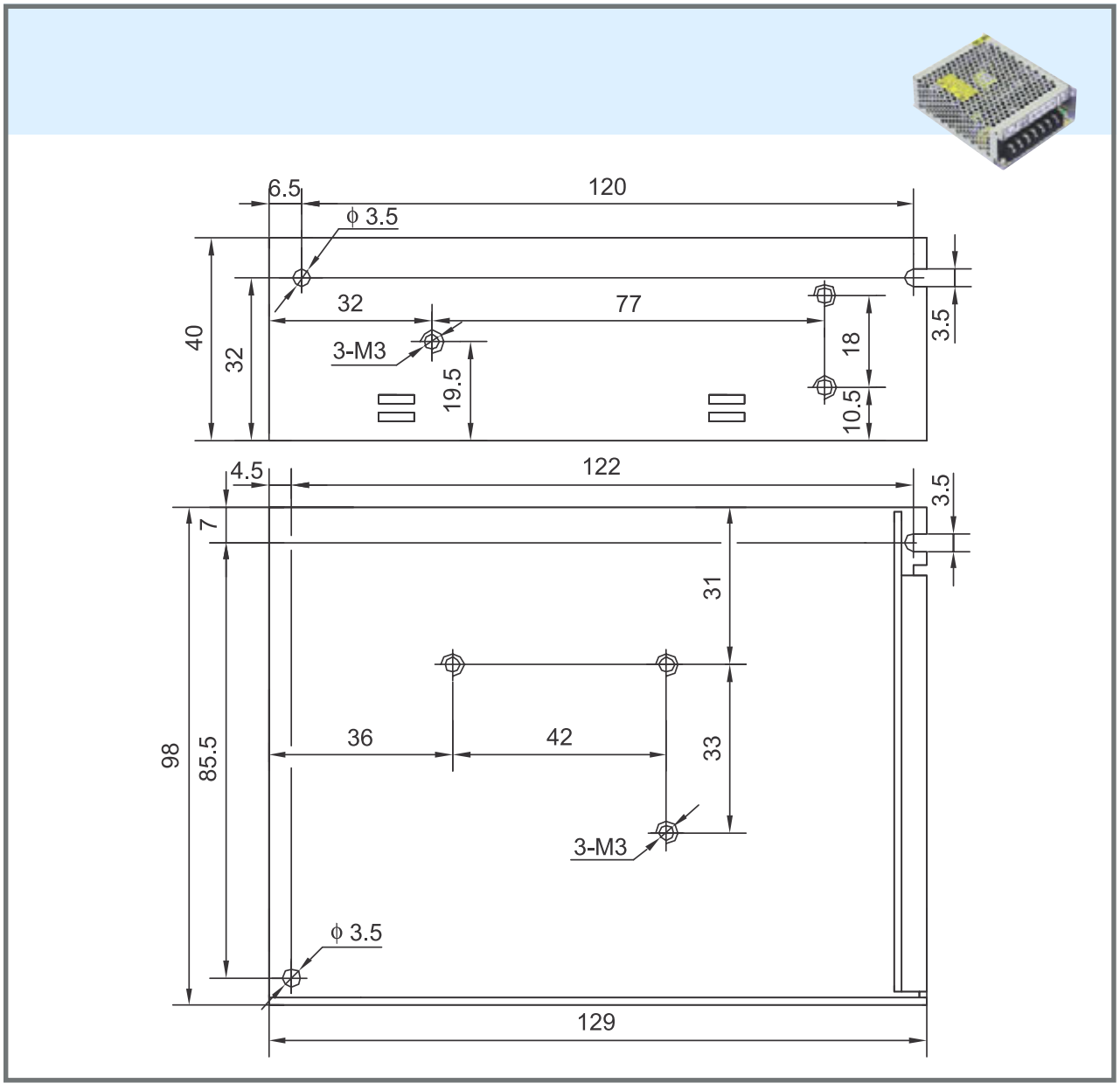Drawing: PS1-40W-SL