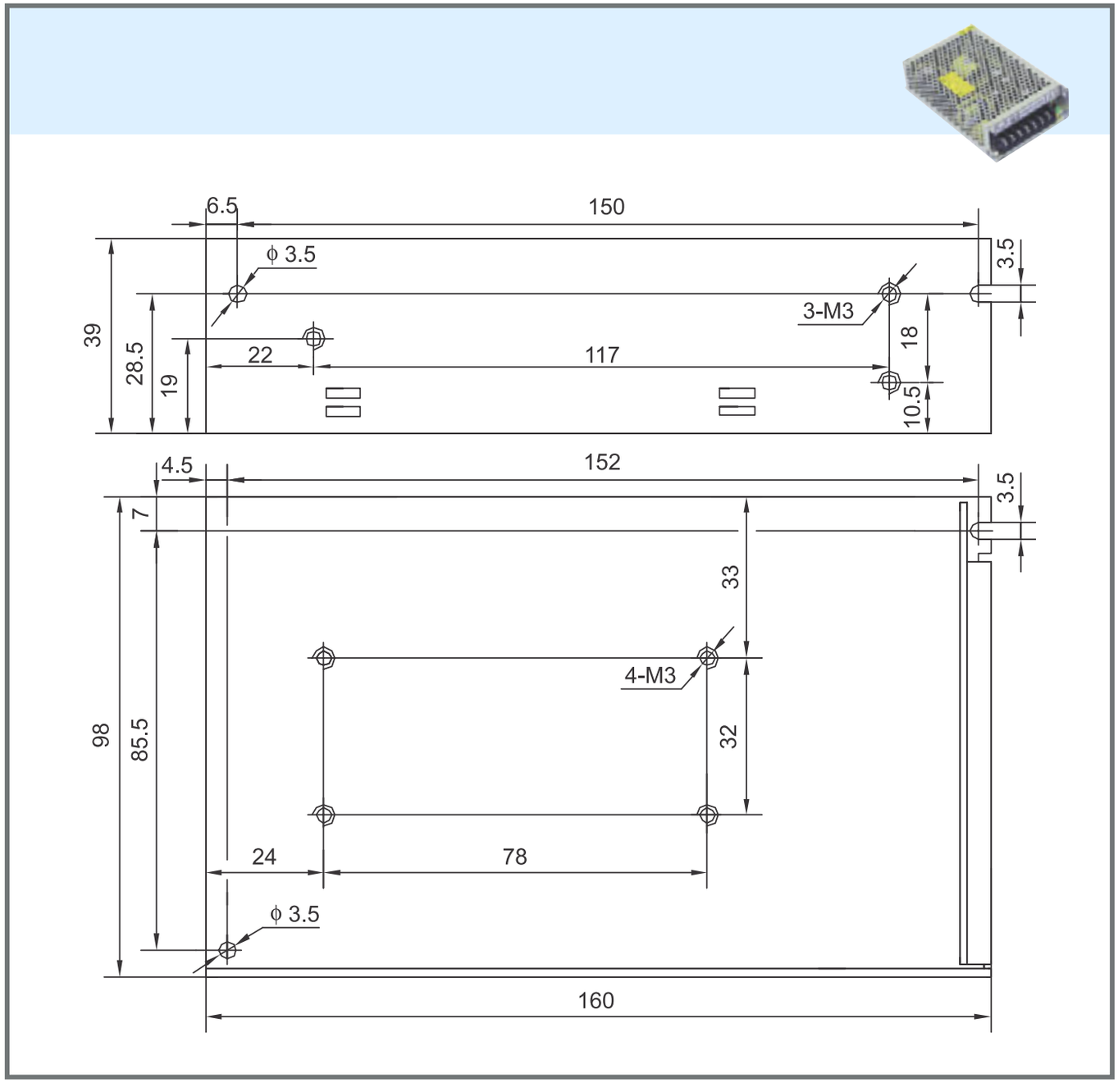Drawing: PS1-60W-SL